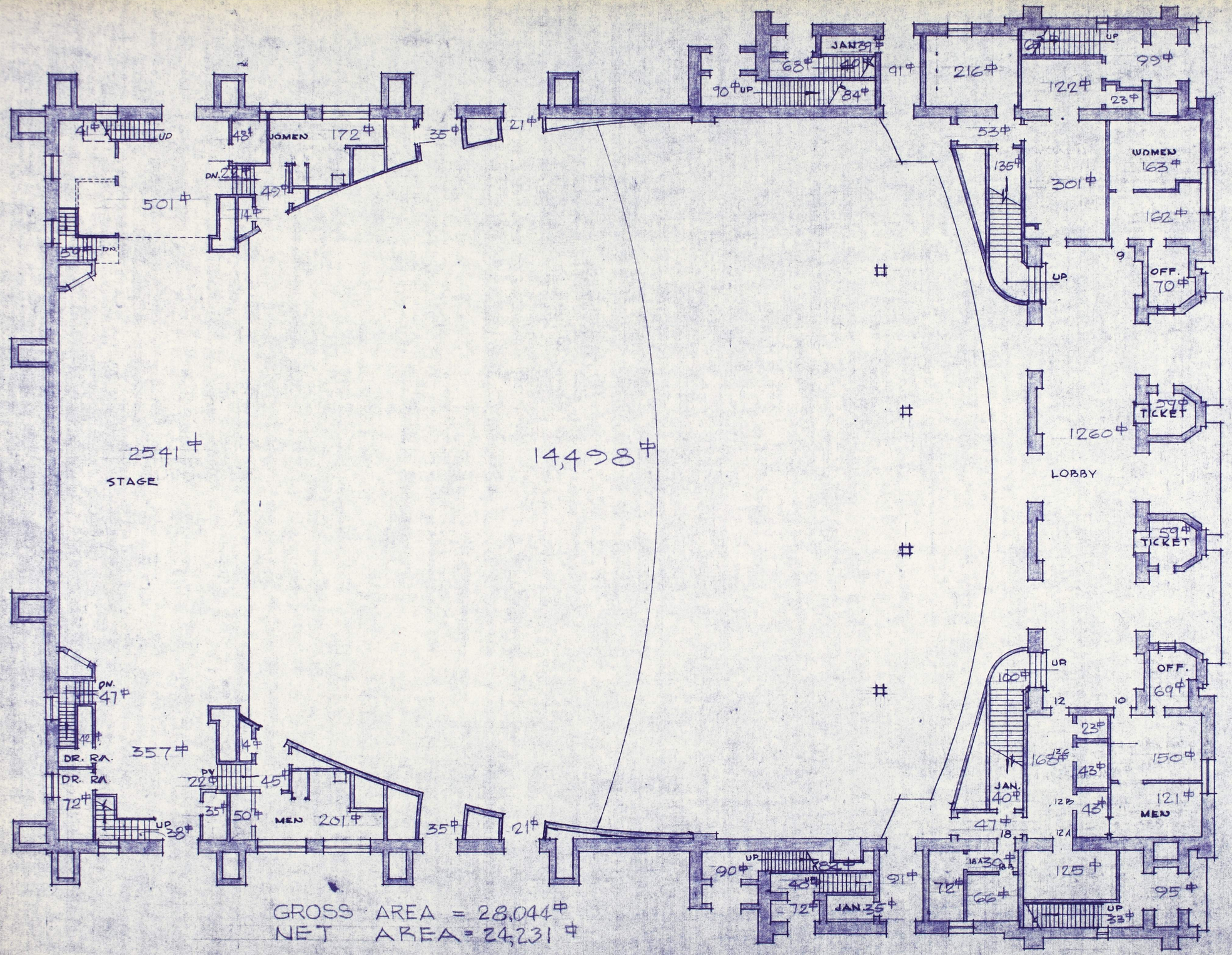

HOCH AUDITORIUM

FIRST FLOOR

SCALE: 1/16" = 1'-0"

DRAWN - JULY 1952
REVISED - SEPT., '58
REVISED NOV 1967
" DEC 1968

BLDG. NO. 39 - SHEET 2 OF 5

FEB 1 1968

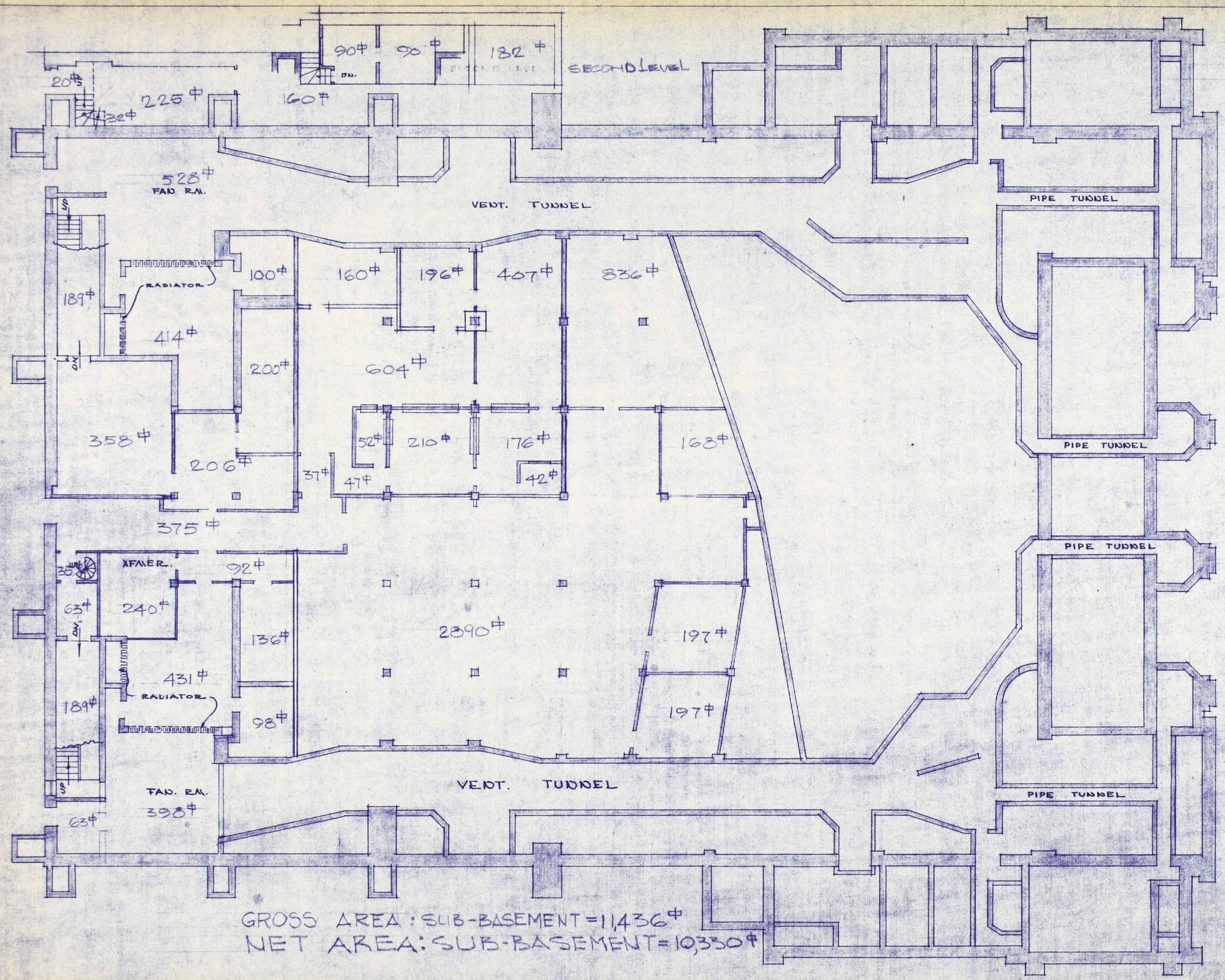

ENTOMOLOGY LAB
1ST FL. GROSS = 584#

ENTOMOLOGY LAB
2ND FL. GROSS = 488#

ENTOMOLOGY LAB
1ST FL. NET = 437#

ENTOMOLOGY LAB
2ND FL. NET = 382#

TOTAL GROSS AREA = 71,626#
TOTAL NET AREA = 59,377#

GROSS AREA: SUB-BASEMENT = 11,436#
NET AREA: SUB-BASEMENT = 10,330#

HOCH AUDITORIUM
SUB-BASEMENT
SCALE 1/16 = 1'-0"

DRAWN - JULY 1952
REVISED - APRIL 5, '57
" SEPT., '58
" AUG. 60
REVISED NOV. 67

BLDG. NO. 39. SHEET 1 OF 5.

FEB 1 1968

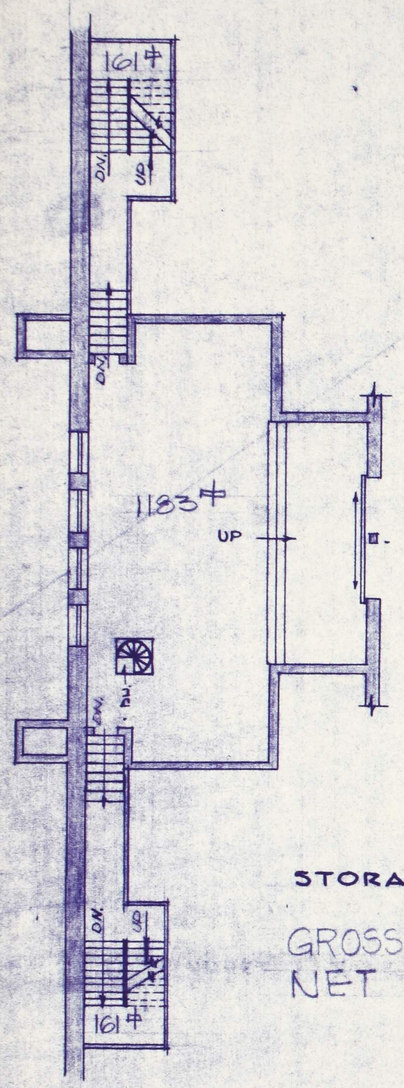

STORAGE BELOW STAGE

GROSS AREA = 1715 ☐
NET AREA = 1505 ☐

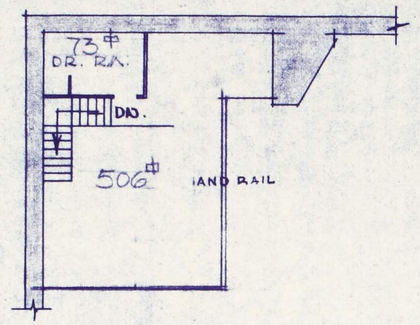

DRESSING ROOM ABOVE EAST STAGE

GROSS AREA = 690 ☐
NET AREA = 578 ☐

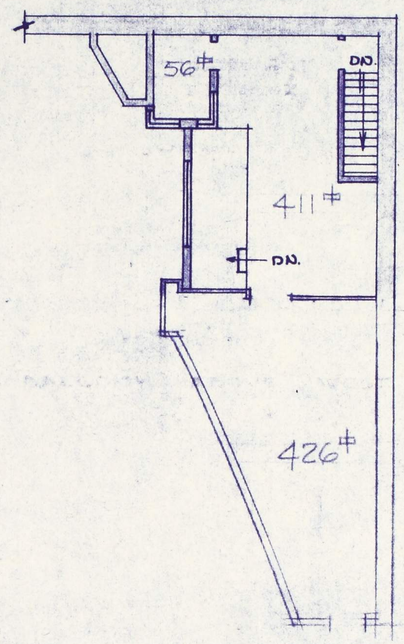

BALCONY ABOVE WEST STAGE

GROSS AREA = 1350 ☐
NET AREA = 892 ☐

HOCH AUDITORIUM

SCALE 1/16 = 1'-0"

REVISED · SEPT., 58
AUGUST 1952
NOV 1967

BLDG. NO. 39. SHEET 5 OF 5.

FEB 1 1968

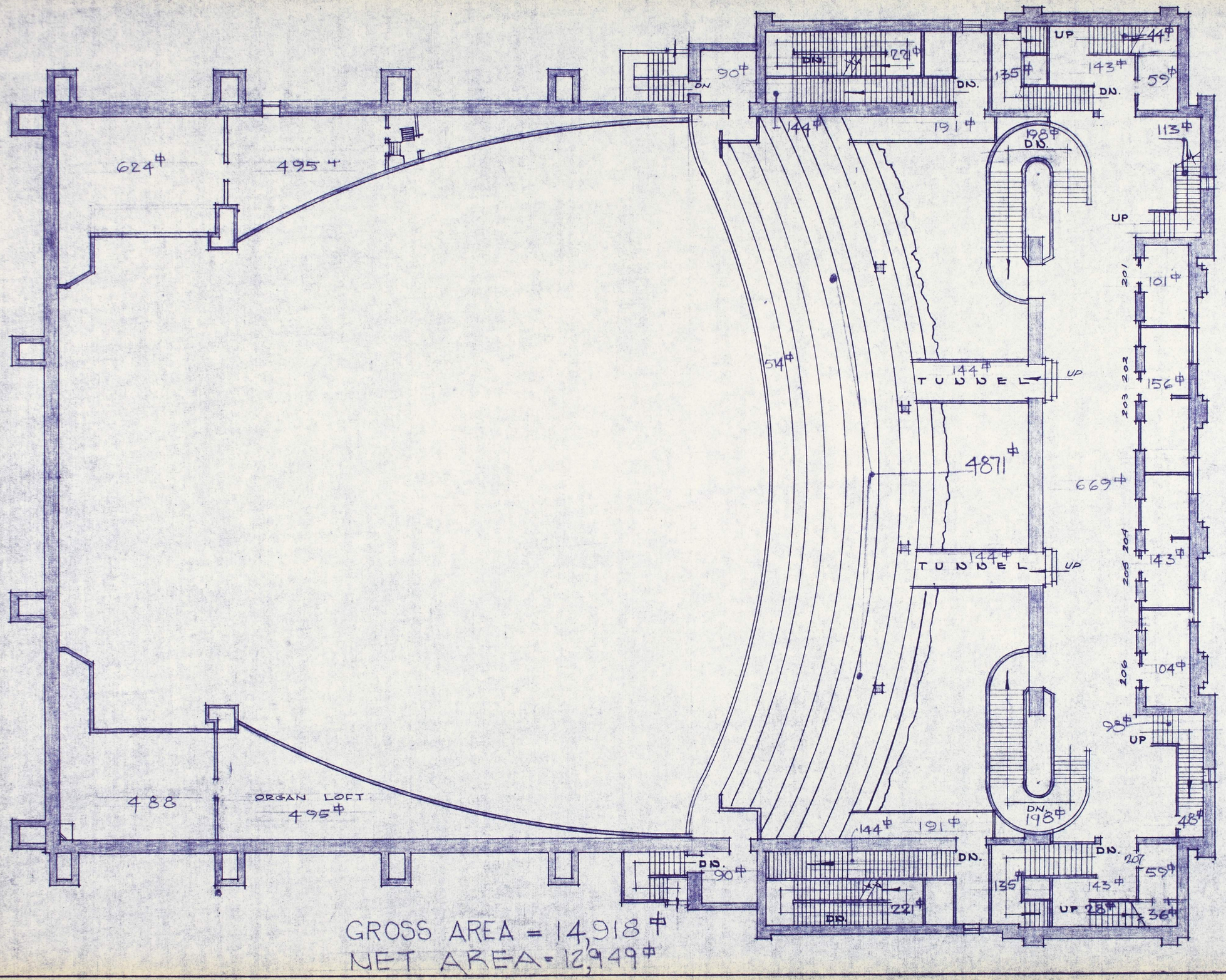

HOCH AUDITORIUM

FIRST BALCONY
LEVEL A.

SCALE: 1/16" = 1'-0"

DRAWN - JULY 1952
REVISED NOV 1967
" DEC 1968

BLDG NO. 89 - SHEET 3 of 5

GROSS AREA = 14,918#
NET AREA = 12,949#

FEB 1 1969