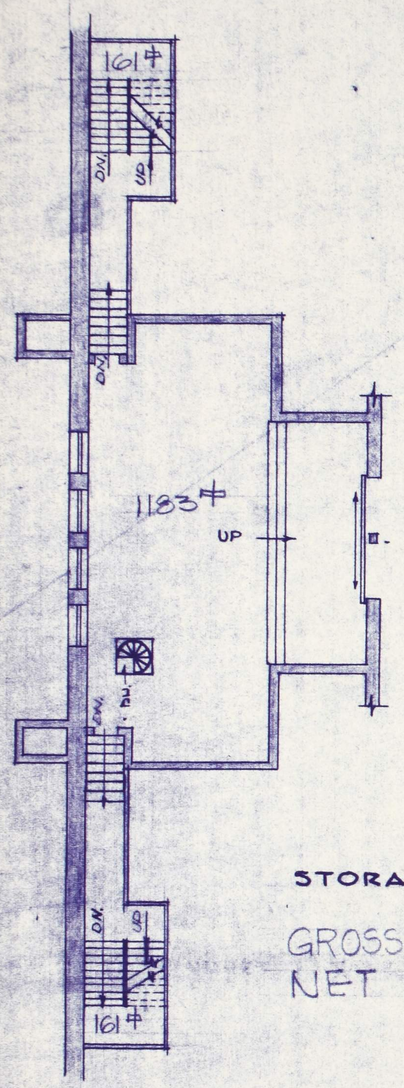

STORAGE BELOW STAGE

GROSS AREA = 1715 ☐
NET AREA = 1505 ☐

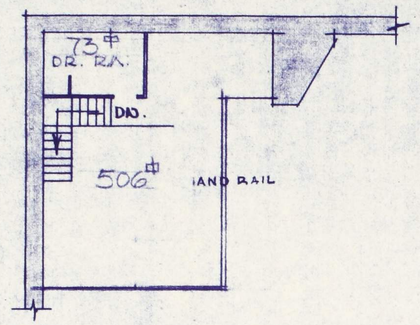

DRESSING ROOM ABOVE EAST STAGE

GROSS AREA = 690 ☐
NET AREA = 578 ☐

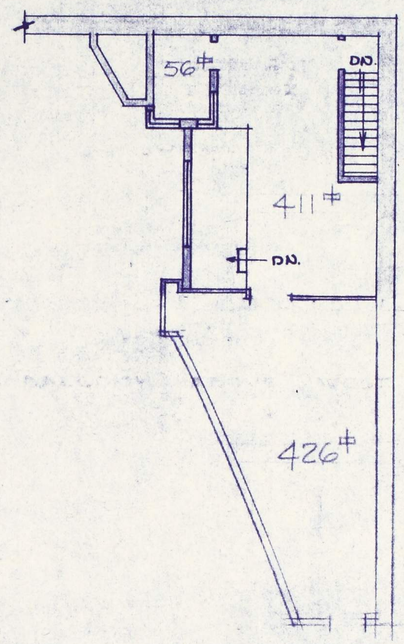

BALCONY ABOVE WEST STAGE

GROSS AREA = 1350 ☐
NET AREA = 892 ☐

HOCH AUDITORIUM

SCALE 1/16 = 1'-0"

REVISED · SEPT., 58
AUGUST 1952
NOV 1967

BLDG. NO. 39. SHEET 5 OF 5.

FEB 1 1968